Installation Manual

iGen7500

Base Mounting Kit





Contents

1. Purpose and Scope 2
2. Important Safety Information 2
2.1 Carbon Monoxide 2
2.2 Fire and Hot Surfaces 2
2.3 Mobile Installation 2
3. Installer Responsibility 2
4. Base Mounting Kit Arrangement 3
5. Mounting Positions 4
6. Selecting the Installation Location 5
7. Supporting Structure 6
8. Installation Procedure 6
8.1 Prepare the Generator 6
8.2 Confirm the Mounting Location 6
8.3 Prepare the Supporting Structure 6
8.4 Install the Base Mounting Kit 7
8.5 Secure the Generator 7
9. Ventilation and Cooling 7
10. Exhaust Safety 8
11. Food Van and Coffee Van Installations 8
12. Electrical Installation 8
13. Fuel Safety 9
14. Inspection After Installation 9
15. Inspection After Initial Vehicle Use 9
16. Periodic Inspection 10
17. Modifications 10
18. Important Limitation 10

1. Purpose and Scope

The iGen7500 Base Mounting Kit is designed to provide mounting points for securing the generator to a suitable supporting structure.

Typical applications may include food vans, coffee vans, mobile catering vehicles, service vehicles, trailers and other suitable stationary or mobile installations.

The Base Mounting Kit provides the mechanical interface between the generator and the supporting structure. It does not constitute a complete vehicle installation system.

The design, construction and suitability of the supporting structure and the overall installation remain the responsibility of the vehicle builder or installer.

2. Important Safety Information

2.1 Carbon Monoxide

WARNING: Generator engine exhaust contains carbon monoxide, a colourless and odourless gas that can cause serious injury or death.

The generator must never be operated in an enclosed or inadequately ventilated space. The installation must prevent engine exhaust gases from entering the vehicle, food preparation or serving areas, operator or passenger compartments, nearby buildings, or other enclosed areas.

The installer must ensure adequate ventilation and safe exhaust discharge for the intended installation.

2.2 Fire and Hot Surfaces

WARNING: The engine, exhaust system and other generator components can become extremely hot during operation.

Do not install combustible materials close to hot components or exhaust outlets. The installer must provide suitable clearance, ventilation and, where required, heat shielding.

2.3 Mobile Installation

WARNING: A generator installed on a vehicle or trailer is subjected to forces significantly different from those experienced during normal stationary operation.

The supporting structure and its attachment to the vehicle must be designed to safely support the generator during normal vehicle operation, including acceleration, braking, cornering, vibration and road impacts.

3. Installer Responsibility

Installation must be carried out by a suitably competent person.

Before installation, the installer must determine that:

- The supporting structure has sufficient strength and rigidity.
- The mounting surface is suitable for the generator weight and operating vibration.
- The structure is adequately attached to the vehicle, trailer or fixed installation.

- The generator cannot move during normal operation or vehicle movement.
- Adequate cooling and combustion air is available.
- Hot cooling air can discharge without recirculating into the generator.
- Engine exhaust is safely discharged.
- Required access for operation, refuelling, inspection and servicing is maintained.
- The installation complies with all applicable vehicle, electrical, fuel, fire and other regulatory requirements.

The Base Mounting Kit does not certify or approve the complete vehicle, trailer or fixed installation.

4. Base Mounting Kit Arrangement

The mounting arrangement uses the generator base support locations together with the supplied mounting components.

The mounting arrangement includes:

- Anti-vibration mounts
- Spacers
- Mounting plate
- Flat washers
- Spring washers
- Mounting bolts

Remove the two anti-vibration mounts that are pre-installed on the generator. Install the components in the arrangement shown in Figure 1.

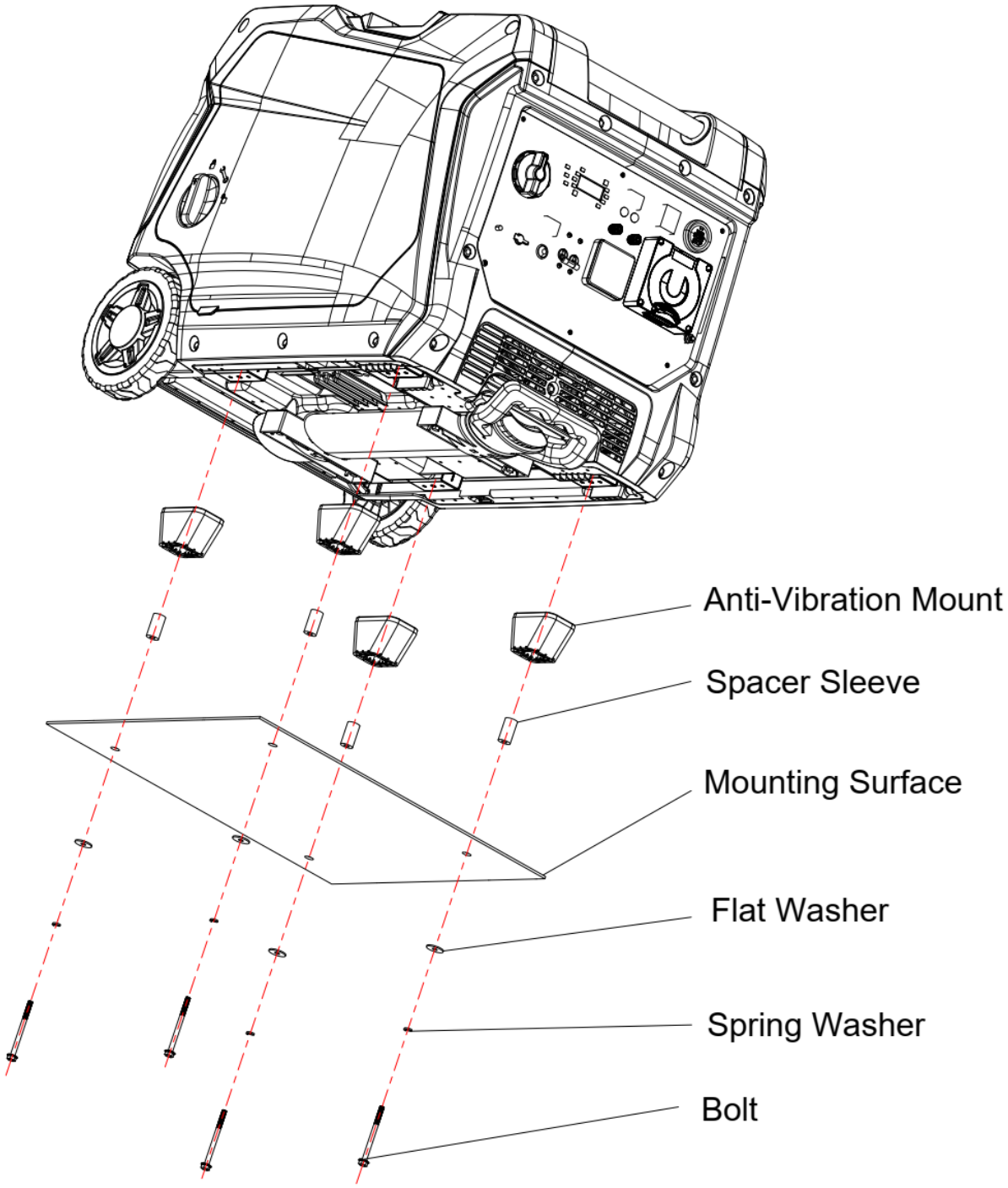

Figure 1 - iGen7500 Base Mounting Kit Component Arrangement

The anti-vibration mounts must remain correctly installed. Do not rigidly attach the generator enclosure directly to the supporting structure in a manner that bypasses the intended vibration isolation system.

5. Mounting Positions

The mounting frame provides four M6 mounting positions for attachment to the supporting structure.

Refer to Figure 2 for the exact mounting-hole positions and dimensional information.

Key reference dimensions shown on the supplied mounting drawing include:

- Overall mounting frame width: 562.5 mm
- Overall reference dimension: 377 mm
- Internal reference dimension: 341 mm
- Mounting reference dimension: 318 mm
- Four M6 mounting holes

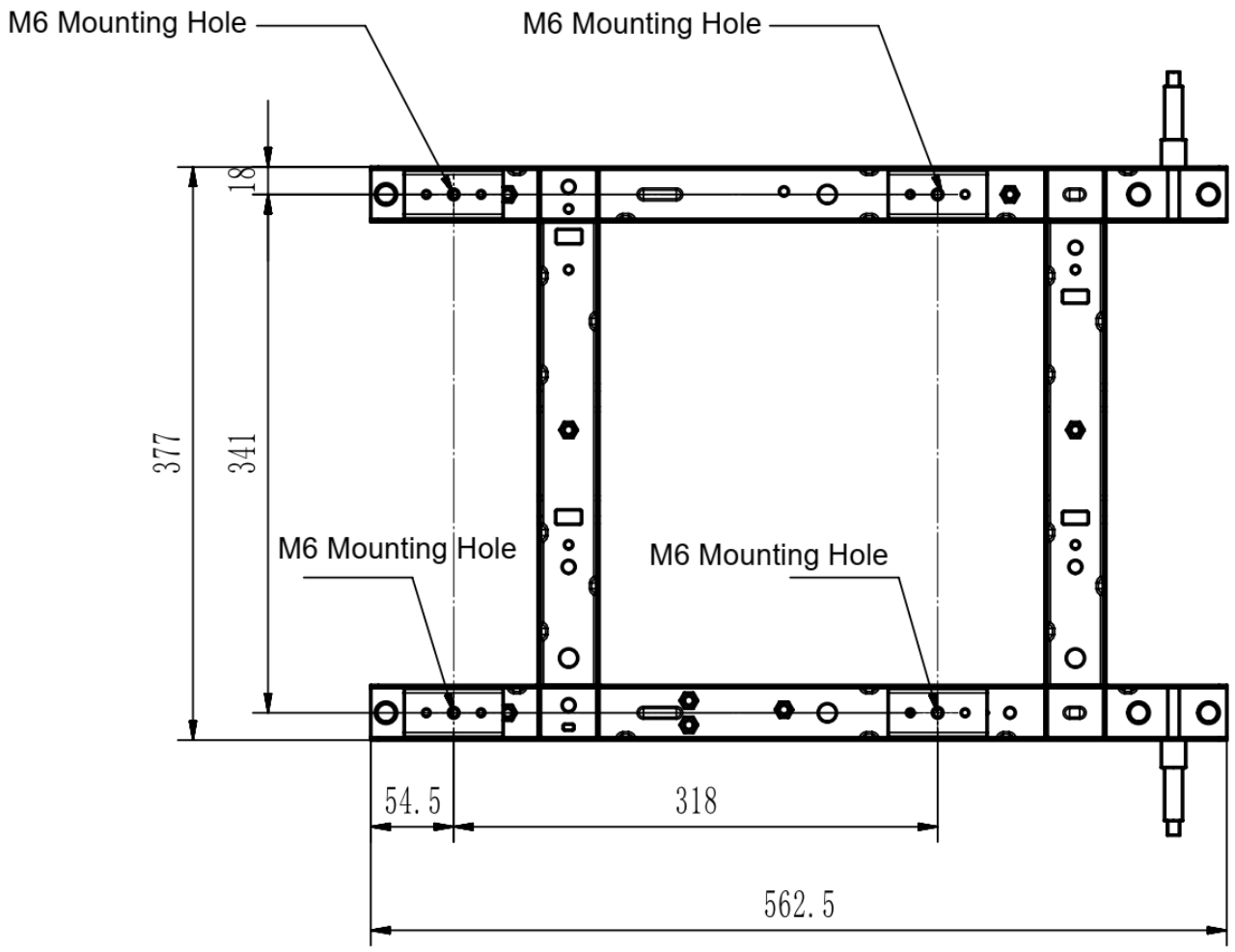

Figure 2 - iGen7500 Mounting Frame Drawing

6. Selecting the Installation Location

Select a location that:

- Provides a strong and rigid supporting structure.
- Allows the generator to remain in its intended operating orientation.
- Provides adequate ventilation.
- Prevents cooling-air recirculation.

- Allows safe exhaust discharge.
- Keeps hot components away from combustible materials.
- Allows safe access to the generator controls.
- Allows safe access for refuelling where applicable.
- Provides sufficient access for routine inspection, maintenance and servicing.
- Protects the generator from excessive road spray, dirt, debris and other environmental contamination where applicable.

Do not install the generator where exhaust gases can accumulate or where operation could expose occupants, operators, customers or bystanders to exhaust gases.

7. Supporting Structure

The Base Mounting Kit must be attached to a suitable structural member or mounting frame.

Do not mount the generator solely to thin decorative panels, sheet-metal cladding or other non-structural vehicle components unless they have been specifically designed and reinforced for this purpose.

The supporting structure must:

- Support the complete generator weight.
- Resist vibration during generator operation.
- Resist forces generated during vehicle movement where applicable.
- Remain sufficiently rigid to avoid excessive flexing of the generator mounting points.
- Provide suitable load distribution into the vehicle, trailer or fixed supporting structure.

Where reinforcement plates, structural sections or additional brackets are required, these must be designed and installed by the vehicle builder or installer.

8. Installation Procedure

8.1 Prepare the Generator

- Switch the generator OFF.
- Allow the engine and exhaust system to cool completely.
- Remove all electrical loads.
- Ensure the generator is stable before commencing installation.

8.2 Confirm the Mounting Location

Position the generator in the proposed installation location and check that adequate space is available for cooling airflow, exhaust discharge, control-panel access, refuelling, routine inspection and maintenance.

Do not proceed until the complete installation arrangement has been checked.

8.3 Prepare the Supporting Structure

Using Figure 2, mark the four M6 mounting positions on the supporting structure. Confirm all dimensions before drilling.

Ensure there are no electrical cables, fuel lines, brake lines or other components behind or underneath the drilling locations.

Prepare suitable mounting holes in the supporting structure. Remove sharp edges and metal debris after drilling. Where drilling exposes bare metal, apply suitable corrosion protection.

8.4 Install the Base Mounting Kit

Install the mounting components in accordance with Figure 1.

Ensure that:

- All anti-vibration mounts are correctly positioned.
- All spacers are installed in their specified locations.
- The mounting plate is correctly orientated.
- Flat washers and spring washers are fitted as shown.
- All four mounting locations are used.

Do not omit, modify or bypass the anti-vibration mounts.

8.5 Secure the Generator

Align the generator and mounting plate with the prepared mounting holes and install all mounting fasteners.

Tighten the fasteners evenly so that the generator remains correctly positioned and the mounting system is not distorted.

Do not overtighten fasteners in a manner that damages or excessively compresses the anti-vibration mounts.

A specific tightening torque is not provided in the supplied mounting drawings. The installer must determine the appropriate tightening method for the fastener and supporting structure being used.

9. Ventilation and Cooling

Adequate airflow is essential for safe generator operation. The generator must receive sufficient fresh air for engine combustion, engine cooling and alternator cooling.

Cooling-air inlets and outlets must not be obstructed.

Where the generator is installed within a compartment, enclosure or partially enclosed area, the installer must ensure that:

- Sufficient fresh air can enter the compartment.
- Hot air can escape freely.
- Discharged hot air cannot recirculate back into the cooling-air intake.
- Compartment temperature remains suitable for generator operation.

Installing the generator inside a vehicle compartment does not automatically make the installation suitable for operation with compartment doors closed. The complete ventilation arrangement must be assessed by the installer.

10. Exhaust Safety

Engine exhaust must discharge safely to atmosphere.

Exhaust must not be directed:

- Into the vehicle.
- Underneath openings where gases may enter the vehicle.
- Towards doors, windows or ventilation openings.
- Towards food preparation or serving areas.
- Towards operators, customers or pedestrians.
- Into another enclosed or poorly ventilated space.

Any modification or extension of the engine exhaust system must be suitably engineered and must not create excessive exhaust restriction or adversely affect generator operation.

11. Food Van and Coffee Van Installations

For food vans, coffee vans and similar mobile catering applications, particular attention must be given to the relationship between the generator and occupied or food-handling areas.

The installation should prevent:

- Exhaust gases entering food preparation or serving areas.
- Hot cooling air entering working areas.
- Fuel or oil contamination of food-handling areas.
- Generator heat affecting stored food or equipment.
- Excessive generator noise or vibration being transmitted into the vehicle structure.

The generator installation must not interfere with the safe operation of other equipment installed in the vehicle.

The vehicle builder or installer is responsible for ensuring that the complete installation meets the requirements applicable to the intended vehicle and food-service application.

12. Electrical Installation

Electrical connections associated with a permanently installed generator must be suitable for the intended application.

Any fixed wiring, changeover arrangement, distribution system or connection to the vehicle electrical installation must be carried out by appropriately qualified persons where required.

Do not modify generator electrical protection systems or safety devices.

The generator must not be connected to another electrical supply unless the connection arrangement has been specifically designed for that purpose.

13. Fuel Safety

Maintain safe access for refuelling. Do not refuel the generator while it is operating or hot.

The installation must prevent spilled fuel from contacting hot engine components, exhaust components, electrical equipment or food preparation areas.

Where the installation incorporates additional fuel-system components or modifications, these must be designed and installed by suitably competent persons and comply with applicable requirements.

14. Inspection After Installation

Before operating the generator for the first time, check:

- All four mounting points are installed.
- All mounting fasteners are secure.
- Anti-vibration mounts are correctly positioned.
- The generator is stable.
- The supporting structure shows no excessive flexing.
- Cooling-air openings are unobstructed.
- Exhaust gases can discharge safely.
- Hot components have adequate clearance.
- Electrical cables are correctly supported and protected.
- Fuel-system components are secure.
- No cables, hoses or other components can contact moving or hot parts.

Start the generator and initially operate it without electrical load. Check for abnormal vibration, movement of the generator, contact between the generator and surrounding structures, exhaust leakage, cooling-air restriction or recirculation, and abnormal noise.

Apply electrical load progressively and repeat the inspection.

Stop the generator immediately if abnormal movement, vibration, overheating or exhaust leakage is observed.

15. Inspection After Initial Vehicle Use

For mobile installations, inspect the mounting system again after the vehicle has completed its initial period of road operation.

Check for:

- Loose mounting fasteners
- Movement of the mounting plate
- Damage or deterioration of anti-vibration mounts
- Cracking or deformation of the supporting structure
- Contact or rubbing between components
- Loose electrical cables or fuel-system components

Correct any problem before further use.

16. Periodic Inspection

The mounting system should be inspected periodically and whenever the generator is serviced.

Check:

- Mounting fastener security
- Anti-vibration mount condition
- Mounting plate condition
- Supporting structure condition
- Signs of corrosion
- Cracks or deformation
- Exhaust-system condition
- Cooling-air passages
- Electrical cable security
- Fuel-system condition

More frequent inspection may be required for vehicles operating on rough roads or in severe conditions. Replace damaged components before operating the generator.

17. Modifications

Do not drill, weld, cut or otherwise modify the generator frame, enclosure or Base Mounting Kit unless specifically approved by the manufacturer.

Do not remove or bypass the supplied anti-vibration mounting arrangement.

Any additional brackets or structural supports should attach to the intended mounting interface rather than modifying the generator itself.

18. Important Limitation

The Base Mounting Kit provides mounting points to assist with installation of the iGen7500 generator.

Because vehicle construction, mounting structures, operating environments and installation arrangements vary significantly, the supply of the Base Mounting Kit does not constitute approval or certification of the complete installation.

It is the responsibility of the vehicle builder and/or installer to verify that the supporting structure, mounting method, ventilation, exhaust arrangement, electrical installation, fuel arrangement and complete vehicle installation are suitable and compliant with all applicable requirements.



Westinghouse Outdoor Power Equipment
19 Corymbia Place
Parkinson QLD 4115 Australia

© 2026 All rights reserved. Content may change without notice.
and Westinghouse are trademarks of Westinghouse Electric Corporation
used under license by Westinghouse Outdoor Power Equipment.

2026-10-16